Sheargard Overload Clutches

The Cross Sheargard clutch complements the range of Torque Limiters by providing machinery protection on applications where accurate torque control and shaft synchronisation are necessary; and when in the event of an overload, total disengagement of driving and driven members is required.

The design of the Sheargard Clutches provides for the transmission of high torques (up to 125,000 Nm) with a compact, low inertia unit. Standard stock products enables prompt delivery, at low cost of shearpin chain sprockets and flexible shaft couplings. The provision of an optional motor monitor plate enables disconnection of the power supply and / or operation of alarm signals in the event of an overload when used in conjunction with a limit switch or proximity switch.

The basic advantages of the well proven "Howdon" wedge shearpin, have been combined with a clutch designed for economic production, with component parts sized to enable the use of the existing range of torque limiter platewheel and chain flexible coupling to enable supply from stock of complete drive assemblies. For higher speed applications a rubber coupling is available.

In the diagram Hub "A" and Flange "B" have matching tapered slots cut axially in their periphery, into which the "Howdon" wedge-shaped shearpins "C" are inserted and firmly clamped by two self-locking screws. Torque is transmitted by the wedge which has a reduced diameter neck in mid-span "D"' designed to shear when the pre-determined torque is exceeded, so allowing the sleeve to rotate freely on the hub.

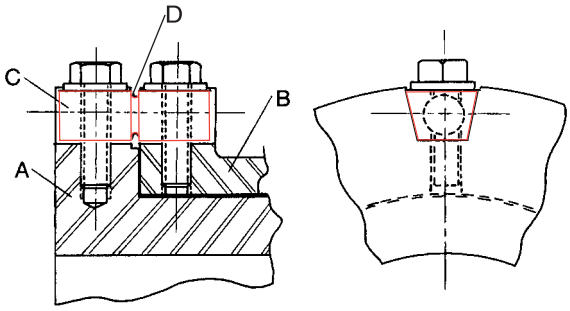

The Cross Sheargard by virtue of its design offers a number of advantages over alternate overload protection systems

1. Simple Design
In a Shearpin the full shear strength is directly available as a frictionless driving force. The use of up to three shearpins provides high torque capacity within a compact unit, keeping both inertias and costs to a minimum. Several ratings of pin for each clutch size provides over 200 stock torque ratings. The Sheargard can be used with chain sprockets, gears, belt drives or shaft couplings. In the event of an overload, the wedge shaped shearpins are easy to locate, and quickly replaced by removal of two self-locking screws and broken halves of shearpin, and replacement with a new wedge pin.

2. Accurate Torque Ratings
Inaccuracy of torque setting in conventional shearpin couplings is caused by non-uniform shear necks, and poor fit of the pin with its mating surfaces. The "Howdon Wedge" pins are precision turned to a constant form and can be expected to fracture within ±10% of catalogue rating. The wedge pins are rigidly located in the mating grooves so totally eliminating fretting fatigue failures, and ensuring zero backlash making it ideal for indexing and reversing drives. The clamping of the pin into the wedge angle ensures positive radial and axial location. The design also ensures load sharing is achieved when a number of pins are used for higher torque drives, enabling different rated pins to be used in one clutch.

3. Reliability
The "Howdon Wedge" pins are naturally "fail-safe" under all conditions. They are not affected by changes in temperature or humidity and are tolerant of most environment conditions. Sizes 350-900SG standard pins are manufactured from brass to avoid sparking in the event of overload, thus making them suitable in volatile atmospheres. The unconventional shape of the wedge pins prevents the fitment of alien pins ensuring safety and product liability requirements are met at all times. The peripheral location of the wedge pins enables easy inspection, and clear colour coding of the pins ensures simple checking of torque setting.

4. Availability
Cross Sheargard Clutches and Couplings are carried in stock with minimum pilot bore. Units can be finished bored and keyed to customer's specifications through a 48 hour rework service. A large stock of standard rated wedge pins, colour coded according to capacity ensures instant spares availability.

5. Low Cost Protection
The cost of Sheargard Clutches is kept low by volume production techniques, so providing the customer with a low cost synchronised, reliable overload protection device.

Tel: +44 121 360 0155
Fax: +44 121 325 1079
Email: sales@crossmorse.com

Sheargard Overload Clutches

Standard Stock Sheargard Clutches are available in five sizes providing a torque range from 27 to 13,700 Nm. Other units with torque ratings to 125,000 Nm are available to order, on short lead time. For further details contact Cross & Morse Sales Office.

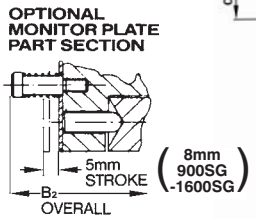

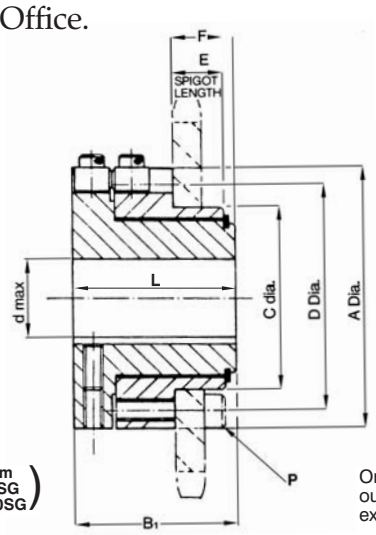

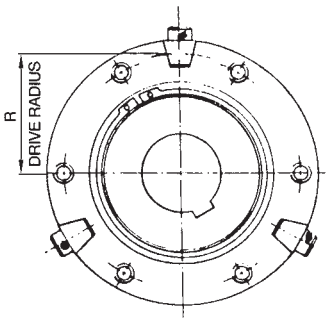

On sizes 1000SG to 1600SG the outer hub is retained by an end plate which extends beyond bore length.

Dimensions

Clutch Size	Wedge[4]* Pins	Drive radius R	Torque Rating[1]* Min Nm	Min lb ft	Max Nm	Max lb ft	Bore Dia d Min	Bore Dia d Max
250SG	2 x W25	26	27	20	336	248	10	25
350SG	3 x W37	34.5	33	24	1509	1113	19	28
500SG	3 x W37	47	45	33	2028	1496	24	45
700SG	3 x W50	66.5	251	185	5580	4115	28	65
800SG	3 x W50	81	306	225	6798	5013	30	80
950SG	3 x W75	97	830	612	16740	12345	45	100
1000SG	4 x W100	128	3468	2558	63920	47138	55	115
1200SG	4 x W100	147	3982	2937	73400	54140	60	150
1400SG	4 x W120	160	12240	9025	100000	73750	70	180
1600SG	4 x W120	200	15300	11285	125000	92200	100	215

Clutch Size	Outside Dia. A	Length Through Bore L	Overall Length B[1]	Overall Length B[2]	Spigot Dia. C	Bolt PCD D	Bolts P	Spigot Length E[2]*	Position Back Face F
250SG	63	36	36	-	38.90 / 38.85	50	6 x M5	11.5	15.5
350SG	85	57	57	78	49.25 / 49.20	65	6 x M6	16	21
500SG	105	72	72	93	73.08 / 73.03	92	6 x M8	25	31
700SG	148	92	92	113	104.85 / 104.80	128	6 x M10	35	40
800SG	175	112	112	133	119.86 / 119.80	146	6 x M12	40	50
950SG	215	130	130	156	149.85 / 149.80	185	6 x M14	54	64
1000SG	280	175	191	217	164.85 / 164.80	220	8 x M16	75*[3]	91*[3]
1200SG	320	200	220	246	224.85 / 224.80	260	8 x M20	100*[3]	120*[3]
1400SG	350	270	295	321	254.85 / 254.80	300	8 x M24	125*[3]	150*[3]
1600SG	425	300	325	351	304.85 / 304.80	360	12 x M24	148*[3]	173*[3]

*[1]For standard Torque Ratings see table page 12.
*[2]The drive sprocket/pulley can overhang spigot.
*[3]Dimensions E & F can be adjusted to suit sprocket widths.
*[4]W37, W50, & W75 Brass Std, others steel.

Minimum Number of Teeth on Sprockets for Standard Roller Chains

Clutch Size \ Chain Pitch	1/2"	5/8"	3/4"	1"	1 1/4"	1 1/2"	2"
250SG	27	22	18				
350SG	25	27	24	18			
500SG	30	24	21	16	18		
700SG	40	33	28	22	18	19	
800SG		38	34	25	21	23	20
950SG			40	31	25	26	23
1000SG				35	29	28	26
1200SG					36	30	29
1400SG					40	34	25
1600SG						38	29

Tel: +44 121 360 0155
Fax: +44 121 325 1079
Email: sales@crossmorse.com

Sheargard Flexible Couplings

Sheargard Chain Couplings

The standard Cross Sheargard unit combines with the Chain Coupling to provide stock overload couplings with minimum backlash and a high reliability. This construction provides a simple, reliable, easy to assemble flexible coupling capable of transmitting high loads and accommodating shaft misalignment with continuous overload protection. Motor monitor assemblies can also be used to switch off power in the event of an overload.

Sheargard ES & KE Couplings

For high speed drives (over 500 rpm) low inertia rubber elastic couplings are offered to enable quiet operation with torsional elasticity to damp vibration and absorb shock loads. The ES Couplings consists of two close grained cast iron jaws with hard rubber drive elements interposed between them, retained by a reinforced thermoplastic cap. The KE Coupling also has close grained cast iron jaws with a Pebax Polyester elastomeric gear ring interspaced to damp vibration and torsional loads. This series can be provided with taper-bore bushes on the coupling end. The KE Coupling provides a lower cost solution.

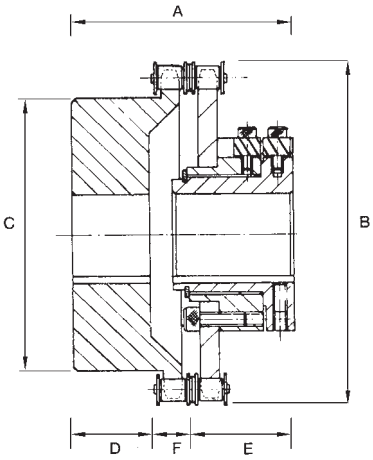

Chain Coupling

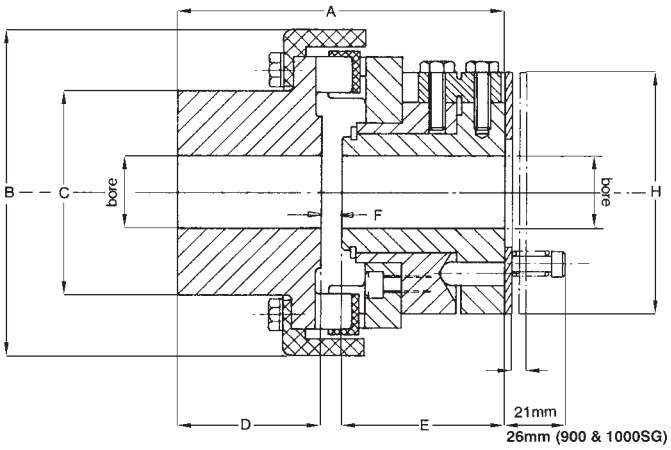

KE & ES Couplings

Chain Coupling Dimensions

Coupling Ref.	Misalignment		Torque Ratings		Sheargard Bore		Coupling Bore							
	Parallel	Angular	Min Nm	Max Nm	Min	Max	Min	Max	A	B	C	D	E	F
350SG-C	0.31	½°	33	1509	19	28	18	57	106	137	104	38	57	11
500SG-C	0.38	½°	45	2028	24	45	22	70	119	187	149	41	72	5
700SG-C	0.51	½°	251	5580	28	65	24	102	162	248	199	67	92	3
800SG-C	0.75	½°	306	6796	30	80	51	120	186	278	175	77	100	9
950SG-C	0.75	½°	830	16740	45	100	51	150	222	326	232	83	130	9
1000SG-C	1.00	½°	3468	37500	45	115	60	200	286	462	320	106	175	5

KE Sheargard Coupling Dimensions

Coupling Ref.	Misalignment		Torque Ratings		Sheargard Bore		Coupling Bore Max *(2)	Taper Bush Size *(3)	*(4) A	B	C	*(4) D	E	F
	Parallel	Angular	Min Nm	Max Nm*(1)	Min	Max								
350SGKE13	0.4	1.0°	33	725	19	28	55	1610	140	130	90	50	57	33
350SGKE15	0.4	1.0°	33	1490	19	28	65	2012	151	150	104	58	57	36
500SGKE15	0.4	1.0°	45	1490	24	45	65	2012	179	150	104	58	72	49
500SGKE18	0.4	1.0°	45	2026	24	45	75	2517	185	180	120	68	72	45
700SGKE23	0.5	1.0°	251	4800	28	65	95	3020	241	225	150	85	92	64
800SGKE28	0.5	1.0°	306	6796	30	80	130	3525	281	275	206	106	100	75

ES Sheargard Coupling Dimensions

Coupling Ref.	Misalignment		Torque Ratings		Sheargard Bore		Coupling Bore Max *(2)	A	B	C	D	E	F	H
	Parallel	Angular	Min Nm	Max Nm*(1)	Min	Max								
350SGES	0.6	0.7°	33	300	19	28	45	114	115	72	48	57	9	85
500SGES	0.7	0.7°	45	1200	24	45	60	143	158	96	61	72	10	105
700SGES	0.9	0.8°	251	3000	28	65	75	183	202	120	75	92	16	148
800SGES	1.0	0.8°	306	4800	30	80	80	208	202	130	82	100	26	175
950SGES	1.4	0.8°	830	12000	45	100	100	249	294	160	97	130	22	215

Except as indicated all dimensions in mm
*(1)Running Torque should not exceed 50% of this figure.
*(2)Coupling half manufactured with blind bore.
*(3)Coupling half can be supplied for taper-bush fitted either from hub end (type H) or from coupling end (type F).
*(4)Taper bore versions are shorter.

Tel: +44 121 360 0155 Fax: +44 121 325 1079
Email: sales@crossmorse.com

Sheargard Torque Ratings

Selection of Wedges for Torque Rating

For each size of Sheargard clutch a selection of Standard wedge pins are available, which can be combined together to provide the desired torque setting. Standard Howdon wedges are coloured coded for identification. Sizes 350SG to 900SG use brass pins as standard (steel optional), other clutches use steel as standard pin material.

A representative selection of standard torque settings possible with standard wedges is shown in the table below, all torque ratings being accurate within ±10%. Additional torque settings can be provided with standard or special wedge pins. To avoid unnecessary tripping of the clutch the design torque should be at least 15% above max. starting torque of the drive. To minimise downtime and costs, use selections with minimum number of wedges, for simplicity of maintenance and stock control use selections with wedges one colour, as shown in the table. If torque setting is critical, intermediate ratings can be obtained by mixing colours. For drives with shaft speed above 120 rpm, or for improved protection of drive and machinery, use optional monitor plate with a limit switch or proximity sensor to switch off motor on overload.

Torque Ratings - Nm

Number of Wedges in Clutch													Torque Rating against each Clutch size and Pin Material (Standards in Bold)														
Orange	Orange/ White	Gold	White	White/ Yellow	Yellow	Yellow/ Blue	Blue	Blue/ Green	Green	Green/ Red	Red	Black	250 Steel	350 Brass	350 Steel	500 Brass	500 Steel	700 Brass	700 Steel	800 Brass	800 Steel	950 Brass	950 Steel	1000 Steel	1200 Steel	1400 Steel	1600 Steel
1														**33**	46	**45**	62	**115**	160	**140**	200						
	1													**46**	63	**62**	85										
		1												**62**	86	**84**	115										
2														**66**	92	**90**	124										
			1										**27**	**86**	119	**116**	169	**251**	345	**306**	420	**830**	1140	3468	3983		
	2													**92**	126	**124**	170										
3														**99**	138	**135**	186										
		2												**124**	172	**168**	230										
				1										**125**	171	**187**	230	**341**	469	**415**	571	**1165**	1600	5160	5926		
	3													**138**	189	**186**	255										
					1								**82**	**165**	226	**221**	303	**446**	645	**543**	786	**1476**	2027	6942	7972	12240	15300
			2										**54**	**172**	238	**232**	338	**502**	690	**612**	840	**1660**	2280	6936	7966		
		3												**186**	258	**252**	345										
						1								**199**	273	**267**	367	**652**	896	**794**	1091	**2012**	2763	8718	10012		
				2										**250**	342	**374**	460	**682**	938	**830**	1142	**2330**	3200	10320	11852		
							1						**107**	**257**	353	**345**	474	**896**	1230	**1091**	1498	**2409**	3309	9824	11282	17632	22040
			3										**81**	**258**	357	**348**	507	**753**	1035	**918**	1260	**2490**	3420	10404	11949		
								1						**300**	411	**402**	562	**1119**	1536	**1363**	1871	**2846**	3908	11607	13330		
					2								**164**	**330**	452	**442**	606	**892**	1290	**1086**	1572	**2952**	4054	13884	15944	24480	30600
									1				**136**	**370**	508	**497**	682	**1388**	1876	**1691**	2285	**3570**	4904	13875	15935	20240	25300
				3										**375**	513	**561**	690	**1023**	1407	**1245**	1713	**3495**	4800	15480	17778		
						2								**398**	546	**534**	734	**1304**	1792	**1588**	2182	**4024**	5526	17436	20024		
										1				**447**	815	**600**	825	**1727**	2371	**2104**	2888	**4190**	5723				
					3								**246**	**495**	678	**663**	909	**1338**	1935	**1629**	2358	**4428**	6081	20826	23916	36720	45900
											1		**168**	**503**	891	**676**	928	**1785**	2452	**2174**	2987	**4810**	6606	15980	18352	24992	31240
							2						**214**	**514**	706	**690**	948	**1792**	2460	**2182**	2996	**4818**	6618	19648	22564	35264	44080
												1						**1860**	2555	**2266**	3112	**5580**	7683	16922	19434	31344	39180
						3								**597**	819	**801**	1101	**1956**	2688	**2382**	3273	**6036**	8289	26154	30036		
								2						**600**	822	**804**	1124	**2238**	3072	**2726**	3742	**5692**	7816	23214	26660		
									2				**272**	**740**	1016	**994**	1364	**2776**	3752	**3382**	4570	**7140**	9808	27750	31870	40480	50600
																								27768	31888	48960	61200
							3						**321**	**771**	1059	**1035**	1422	**2688**	3690	**3273**	4494	**7227**	9927	29472	33846	52896	66120
										2				**994**	1630	**1200**	1650	**3454**	4742	**4208**	5776	**8380**	11446				
								3						**900**	1233	**1206**	1686	**3357**	4608	**4089**	5613	**8538**	11724	34821	39990		
											2		**336**	**1006**	1782	**1352**	1856	**3570**	4904	**4348**	5974	**9620**	13212	31960	36704	49984	62480
												2						**3720**	5110	**4532**	6224	**11160**	15366	33844	38868	62688	78360
						4																		34872	40048		
							4																	39296	45128	70528	88160
									3				**408**	**1110**	1524	**1491**	2046	**4164**	5628	**5073**	6855	**10710**	14712	41625	47805	60720	75900
										3				**1341**	2445	**1800**	2475	**5181**	7113	**6312**	8664	**12570**	17169				
								4																46428	53320		
											3		**504**	**1509**	2673	**2028**	2784	**5355**	7356	**6522**	8961	**14430**	19818	47940	55056	74976	93720
												3						**5580**	7665	**6798**	9336	**16740**	23049	50766	58302	94032	117540
									4															55500	63740	80960	101200
											4													63920	73408	99968	124960

Note:- Torque capacity of size 250SG controlled by unit size, and not wedge capacity. Sizes 1000SG and above are designed to accept up to four wedges, size 250SG only has two wedge slots.

Wedge Replacement following Overload:

To return Sheargard to service after overload, first remove all broken halves of wedges by removing their locking screws. Rotate hub on body until wedge grooves are in line (for drives where synchronisation is essential rotate until alignment marks on body and hub flanges are in line). Ensure wedge grooves are clean. Fit new wedges of same colour identification as parts removed and fix firmly into place by tightening locating screws.

Servicing Sheargard Clutches

Sheargard units require minimal servicing. Routine checks that wedge locating screws and monitor plate screws are securely locked down is generally all that is required. If the clutch has suffered a number of overloads, or at major maintenance shutdowns disassembly of the clutch, cleaning with paraffin and light greasing of bearing surfaces will ensure long service life.

Tel: +44 121 360 0155 Fax: +44 121 325 1079 Email: sales@crossmorse.com